Loader

der automatic loading module

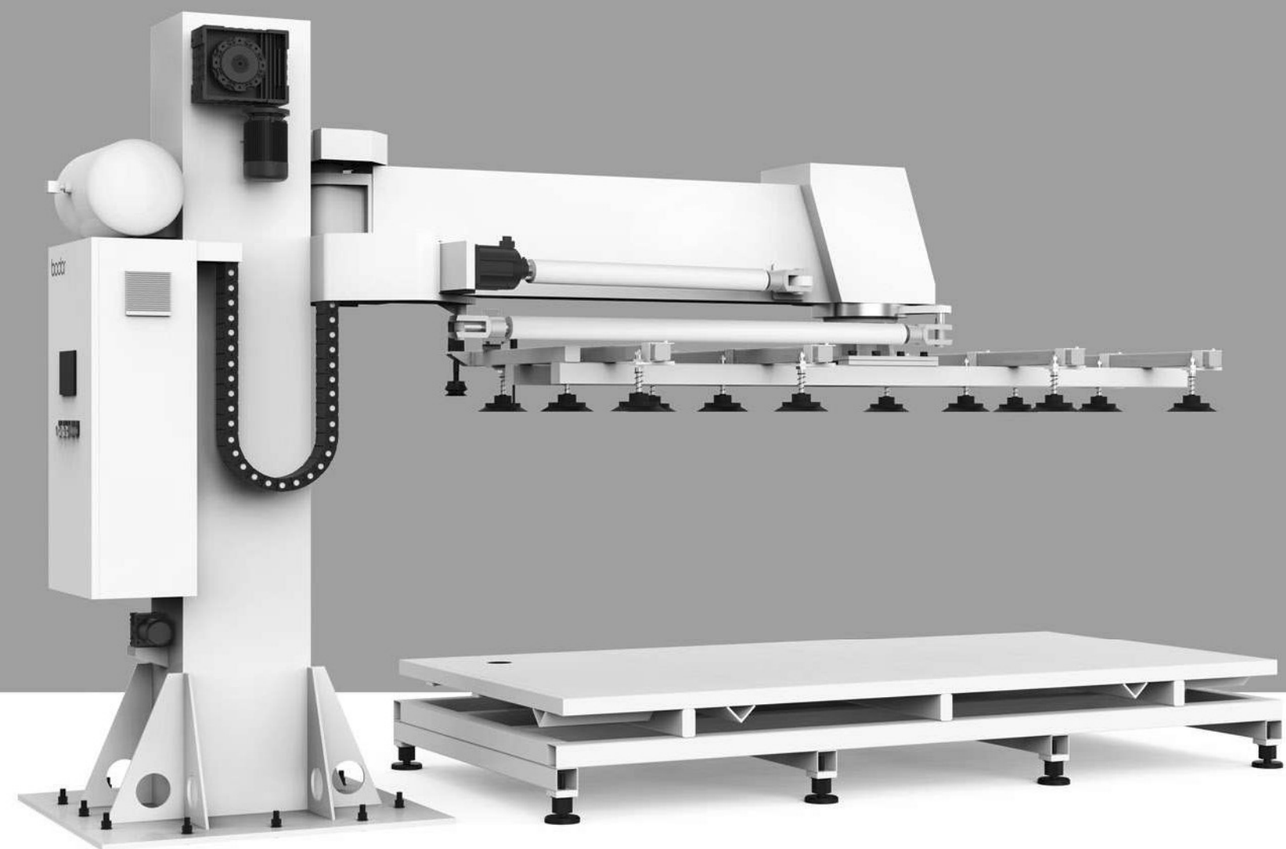

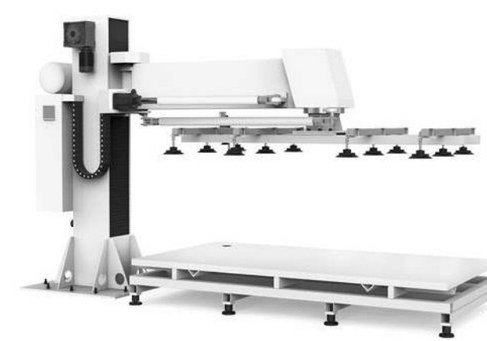

cal Parameters

	iLoader
ea	3000mm*1500mm / 1500mm*1200mm / 1000mm*1000mm
model	E3015 / E3015T / P3015 / P3015T
hickness of feeding plate	1mm
hickness of feeding plate	20mm
	0~120°

boo

Trans

s full automatic loading and unloading system

cal Parameters
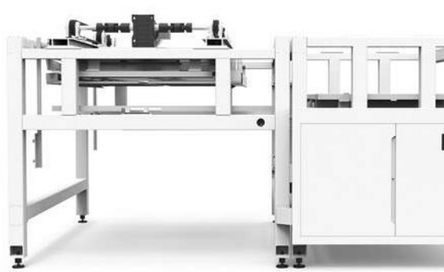
	iTrans
ea	1000mm*1000mm-3000mm*1500mm
model	P3015
hickness of feeding plate	1mm
hickness of feeding plate	25mm
eight of finished sheet	85mm